MH20
CHEMICAL METERING PUMPS

Product Outline Specification

33cc/rev Chemical Metering Pump

33cc/rev

Performance:

ITEM	FEATURE	UNITS	VALUE
1	Max capacity	cc/rev	33
	Min capacity	cc/rev	5
	Max gallons	per/min	15.7
	Min gallons	per/min	.26
2	Max outlet pressure TDI		210 bar/3045 psi
	Max outlet pressure MDI, POLYOL		250 bar/3625 psi
	Min outlet pressure		2 bar/29 psi
3	Max inlet pressure		20 bar/290 psi
	Min inlet pressure	bar	atmospheric
4	Max Speed	rev/min	1800
	Min Speed	rev/min	200
5	Max viscosity	cSt.	2000
	Min viscosity	cSt.	1
6	Fluid cleanliness Polyol	ISO	18/13
	Fluid cleanliness isocyanate	ISP	13/10
7	Max temperature		80°C/176°F
	Optimum temperature		10°-50 °C/50°-122°F

Details:

- Viton seals used through out
- Improved dial indicator
- Extremely user friendly design
- Inlet port 24 SAE Straight Thread, outlet port 16 SAE Straight Thread (Other fitting sizes available upon request)
- Tuft ride standard for corrosion resistance
- Double Flap Shaft Seals
- Capable of being used in low pressure operations

Lower pump operating costs and production volume

MH20

CHEMICAL METERING PUMPS

Product Outline Specification

33cc/rev Chemical Metering Pump

33cc/rev

Optional Equipment

COMPLETE STARTER PACKAGES
Available for First Time Buyers

- Inlet Flange
- Pressure Relief Valve Outlet Flange
- Magnetic Drive, C-Face Coupler
- Pump & Motor Couplers
- Pump & Motor Bell Housing Alignment System
- Handwheel & Shaft Seal Lubricating System
- Remote Flow Meters
- MHR Technicians Available for Installation (Optional)
- On sight Demonstration (Optional)

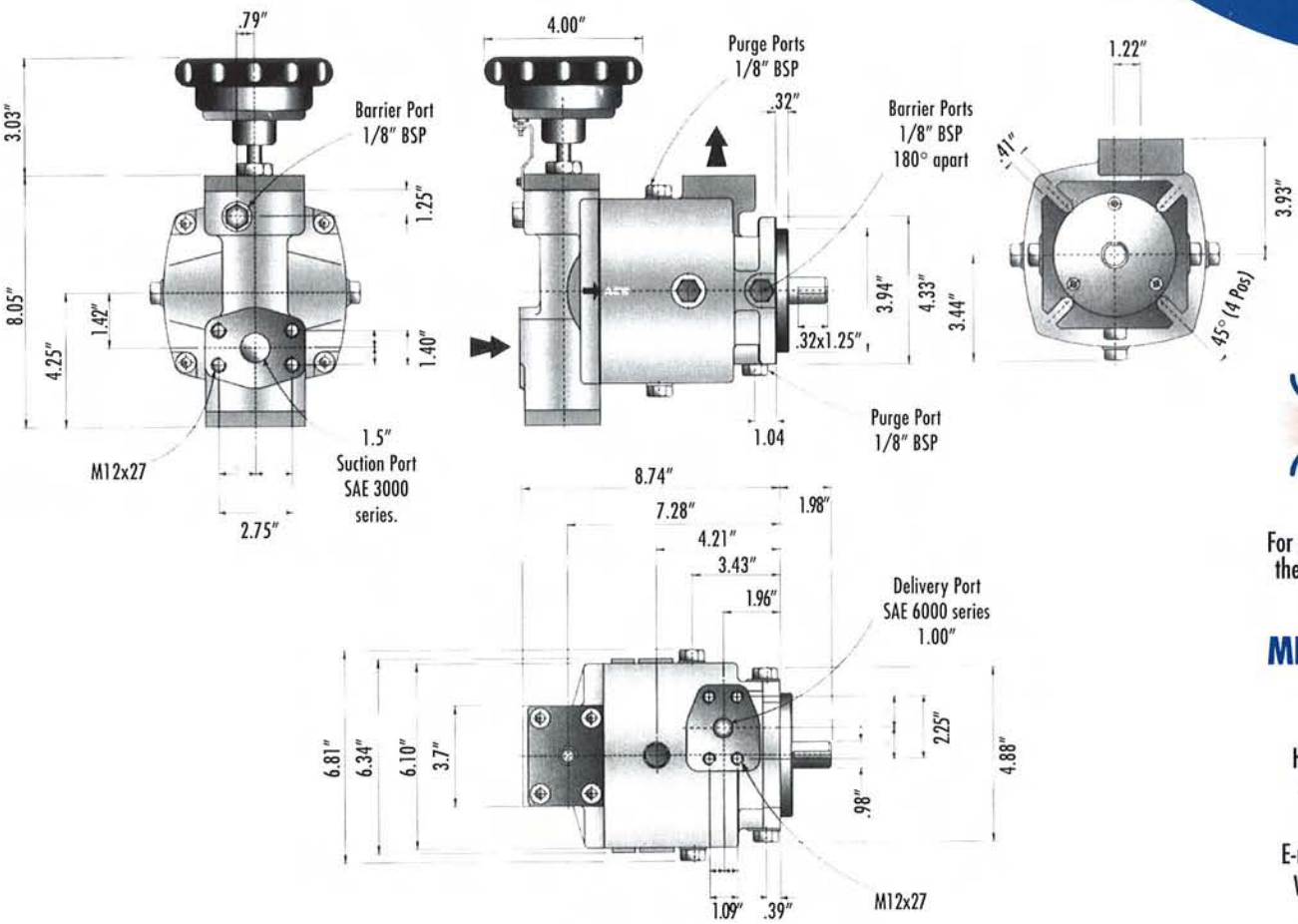

For additional information on these products or any other product contact:

MIX HEAD REPAIR & SALES

78 Veterans Drive
Holland, MI 49423 USA
616.394.0191 Phone
616.394.9711 Fax
E-mail: info@mhr-inc.com
Web: www.mhr-inc.com